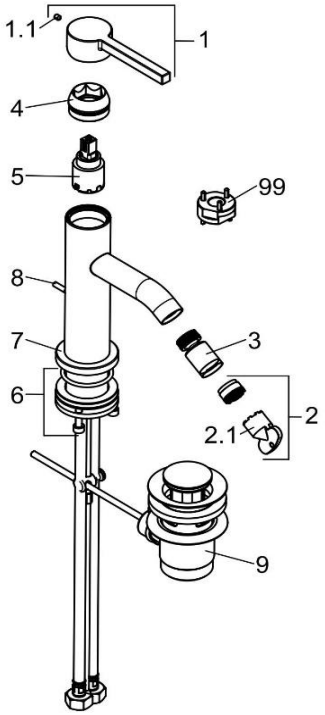


| 202163915 | | Bidet- Einhandmischer DN 15 | single lever bidet mixer DN 15 |
|---|---|---|---|
| 1 | 7392039-00 | HEBEL NOVA FONTE PURA | LEVER NOVA FONTE PURA |
| 1.1 | 92105035-00 | GEWINDESTIFT | GRUB SCREW |
| 2 | 7509300-00 | STRAHLREGLER | AERATOR |
| 2.1 | 93104000-00 | STRAHLREGLERSCHLÜSSEL | WRENCH FOR AERATOR |
| 3 | 7303139-00 | KUGELGELENK | BALL JOINT |
| 4 | 92071339-00 | ABDECKSCHRAUBE | COVER SCREW |
| 5 | 7486800-00 | STEUEREINHEIT | CERAMIC CARTRIDGE |
| 6 | 7396600-00 | BEFESTIGUNGSSATZ | MOUNTING KIT |
| 7 | 7396539-00 | ROSETTE | ESCUTCHEON |
| 8 | 91701539-00 | ZUGSTANGE | LIFT ROD |
| 9 | 7654539-00 | ABLAUFGARNITUR | POP UP WASTE |
| 99 | 92916500-00 | SPANNSCHRAUBENSCHLÜSSEL | WRENCH FOR FASTENING SCREW |
| | | | |
| | | | |
| | | | |
| | | | |
| | | | |
| | | | |
| | | | |
| | | | |
| | | | |
| | | | |