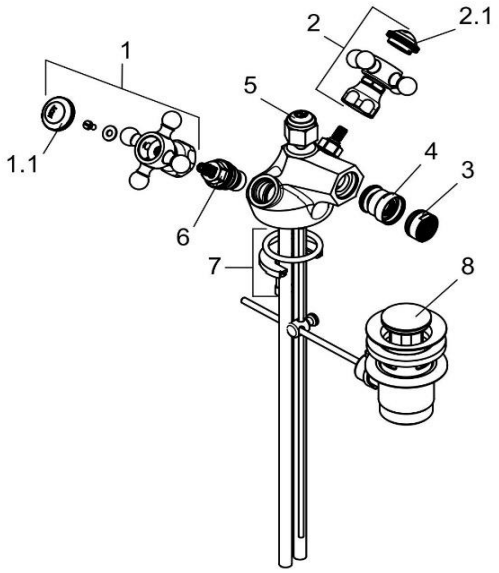

512110520		Bidetarmatur DN 15	bidet mixer DN 15
1	7530105-00	GRIFF HOT - 1926	HANDLE HOT - 1926
1.1	7502305-00	ABDECKKAPPE HOT	COVER CAP HOT
2	7530005-00	GRIFF COLD - 1926	HANDLE COLD - 1926
2.1	7502205-00	ABDECKKAPPE COLD	COVER CAP COLD
3	7641605-00	STRAHLREGLER	AERATOR
4	7537505-00	KUGELGELENK	BALL JOINT
5	7510405-00	ZUGSTANGE	LIFT ROD
6	7502500-00	KERAMIK - OBERTEIL	CERAMIC HEAD PART
7	7623400-00	BEFESTIGUNGSSATZ	MOUNTING KIT
8	7526005-00	ABLAUFGARNITUR	POP UP WASTE