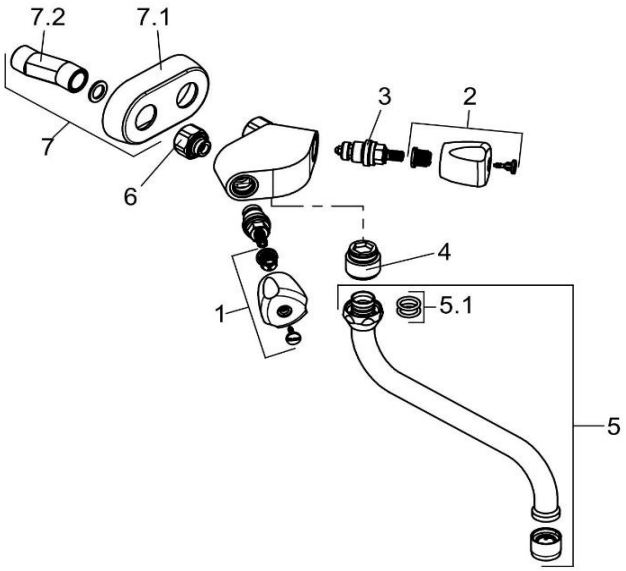

314530515		Spültisch-Wandarmatur DN 15	wall mounted sink mixer DN 15
1	7637805-00	GRIFF	HANDLE
2	7637705-00	GRIFF	HANDLE
3	7552600-00	OBERTEIL	HEAD PART
4	7565705-00	ANSCHLUSSNIPPEL	CONNECTING NIPPLE
5	7541905-00	AUSLAUF	SPOUT
5.1	92502311-00	O - RING	O - RING
6	7595405-00	WANDARMATURENANSCHLUSS	WALL CONNECTING NIPPLE
7	7595505-00	S - ANSCHLUSS	S - CONNECTIONS
7.1	92301705-00	ROSETTE	ESCUTCHEON
7.2	7573800-00	S - ANSCHLUSS	S - CONNECTIONS