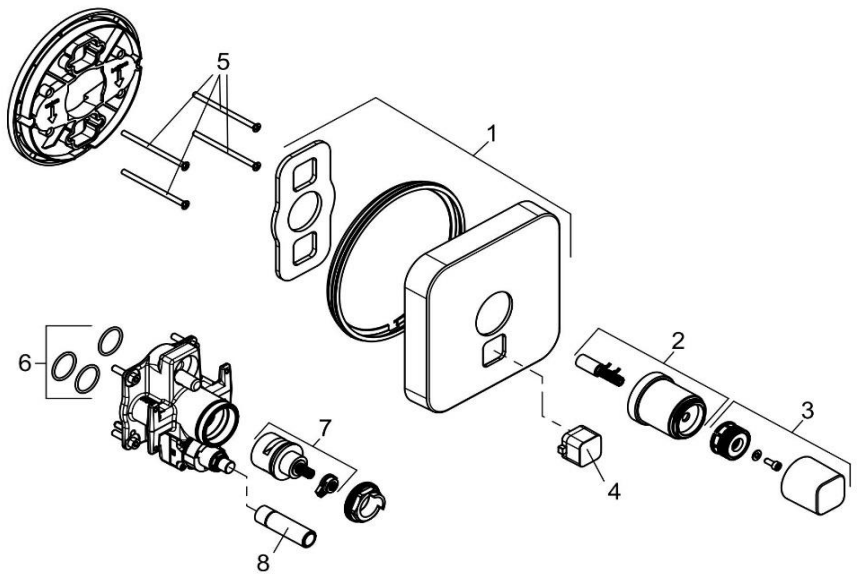

386030538		Unterputz-Armatur	concealed mixer
1	7328805-00	UP - ROSETTE	ESCUTCHEON, CONCEALED
2	7351205-00	HÜLSE	SLEEVE
3	7351105-00	GRIFF PUSH	HANDLE PUSH
4	7861905-00	DRUCKTASTE VIERECKIG POWER	PRESS BUTTON SQARE POWER
5	7329235-00	SCHRAUBEN SET	SCREW SET
6	7301100-00	DICHTUNGSSATZ	SEALING SET
7	7567800-00	KERAMIK - OBERTEIL	CERAMIC HEAD PART
8	93016000-00	HÜLSE	SLEEVE