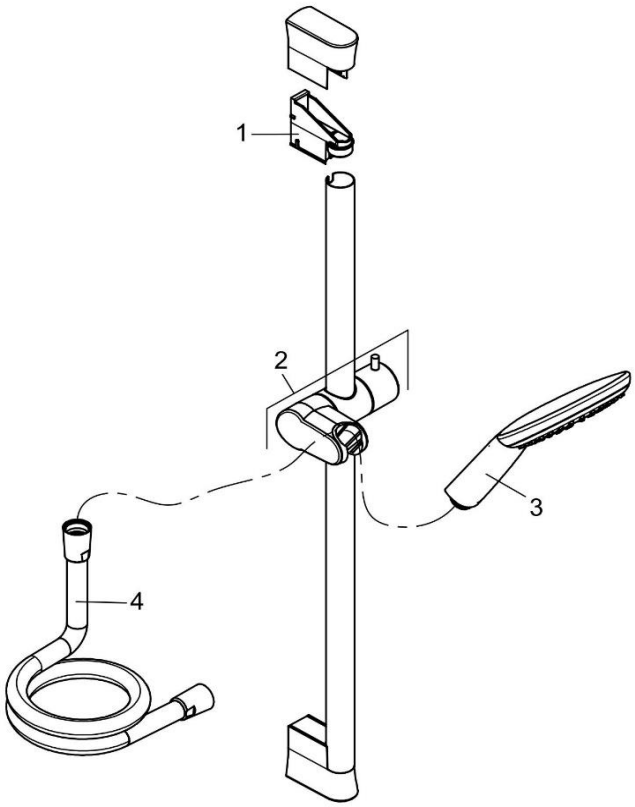

6783005-00		Brause-Set 1S	shower set 1S
1	93100805-00	WANDHALTER	WALLHOOK
2	7322505-00	GLEITSCHIEBER	GILDER
3	6780005-00	HANDBRAUSE	HANDSHOWER
4	6107205-00	BRAUSESCHLAUCH	SHOWER HOSE