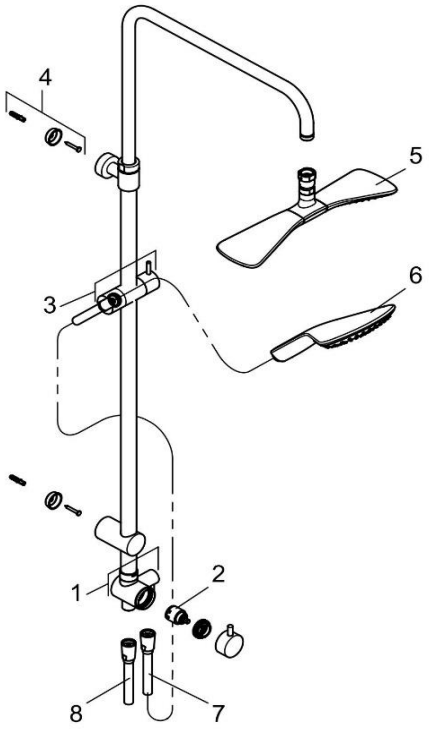

10/2013 ->

6709105-00		Shower Duo	Shower Duo
1	7317905-00	UMSTELLUNG	DIVERTER
2	7405600-00	DIVERTER KARTUSCHE	DIVERTER CARTRIDGE
3	7317605-00	GLEITSCHIEBER	GILDER
4	7464400-00	BEFESTIGUNGSSATZ	MOUNTING KIT
5	6757505-00	KOPFBRAUSE	HEADSHOWER
6	6770005-00	HANDBRAUSE	HANDSHOWER
7	6107205-00	BRAUSESCHLAUCH	SHOWER HOSE
8	7312405-00	BRAUSESCHLAUCH	SHOWER HOSE

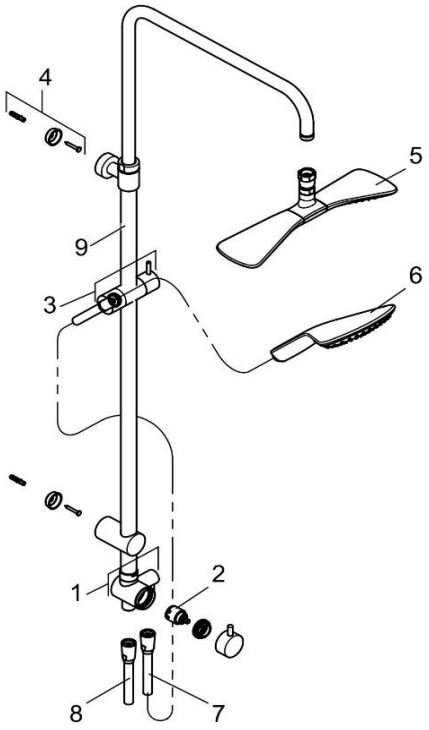

-> 09/2013

6709105-00		Shower Duo	Shower Duo
1	7317905-00	UMSTELLUNG	DIVERTER
2	7405600-00	DIVERTER KARTUSCHE	DIVERTER CARTRIDGE
3	7464005-00	GLEITSCHIEBER	GILDER
4	7464400-00	BEFESTIGUNGSSATZ	MOUNTING KIT
5	6757505-00	KOPFBRAUSE	HEADSHOWER
6	6770005-00	HANDBRAUSE	HANDSHOWER
7	6107205-00	BRAUSESCHLAUCH	SHOWER HOSE
8	7312405-00	BRAUSESCHLAUCH	SHOWER HOSE
9	7308205-00	BRAUSESTANGE	SHOWER RAIL