KLUDI ZENTA
Single lever bidet mixer
DN 15

Ref.:
385309175

Finishes:
91 white/ chrome

Product description
Manufacturer KLUDI GmbH & Co. KG
Typ: KLUDI ZENTA
Single lever bidet mixer
Ref.: 385309175
Bidet mixer DN 15/ PN 10
single lever mixer
single hole mounted
solid lever, metal
ball joint with aerator M 24 x 1
ceramic cartridge with hotwater safety device
flow rate at 3 bar = 7,4 l/ min.
flexible hoses G 3/8 DVGW approved
rapid installation set
pop up waste 1 1/4" metal

Product picture

Dimensional drawing

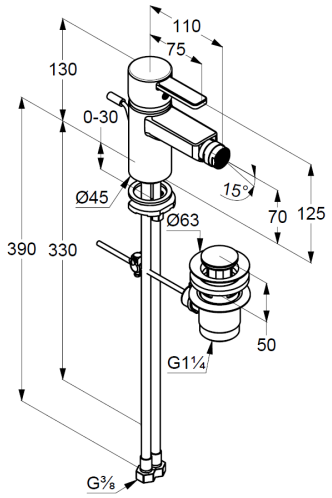

Flow rate diagram

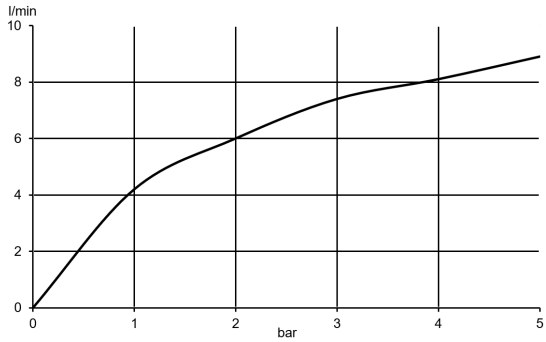

KLUDI
WATER IN PERFECTION