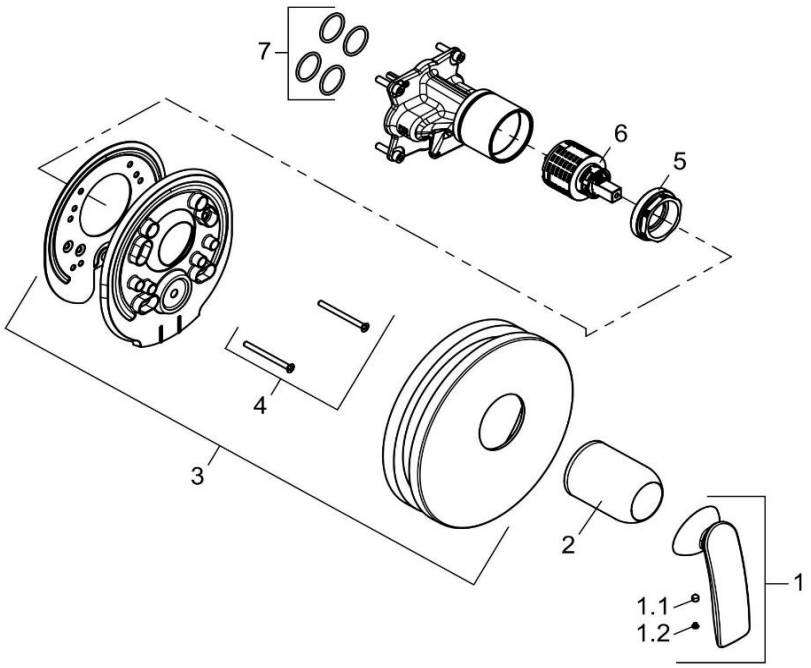

526550575		Unterputz-Brause-Einhandmischer	concealed single lever shower mixer
1	7499005-00	HEBEL BALANCE	LEVER BALANCE
1.1	92204601-00	GEWINDESTIFT	GRUB SCREW
1.2	7488700-00	STOPFEN	PLUG
2	92059105-00	ABDECKHÜLSE	COVER SLEEVE
3	7499205-00	UP - ROSETTE	ESCUTCHEON, CONCEALED
4	7446335-00	SCHRAUBEN SET	SCREW SET
5	92266837-00	SPANNSCHRAUBE	FASTENING SCREW
6	7685600-00	STEUEREINHEIT	CERAMIC CARTRIDGE
7	7301100-00	DICHTUNGSSATZ	SEALING SET