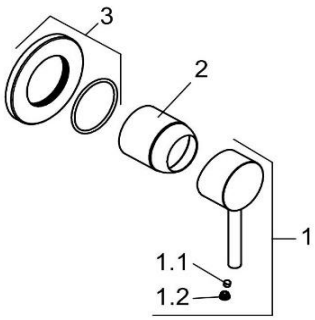

389250576		Unterputz-Brause-Einhandmischer	concealed single lever shower mixer
1	7373105-00	HEBEL BOZZ	LEVER BOZZ
1.1	92204601-00	GEWINDESTIFT	GRUB SCREW
1.2	93089705b-00	STOPFEN	PLUG
2	92215405-00	ABDECKKAPPE	COVER CAP
3	7448805-00	UP - ROSETTE	ESCUTCHEON, CONCEALED