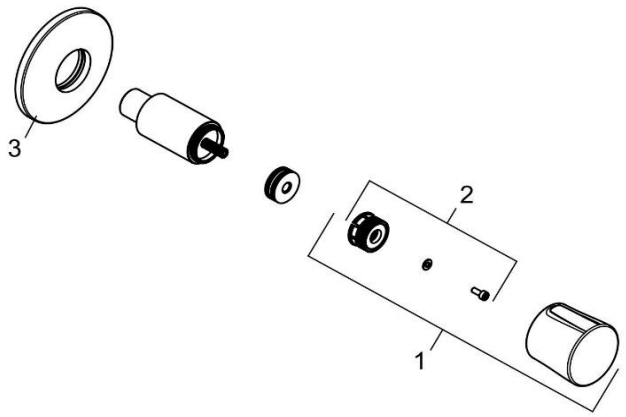

528159175		Unterputzventil	concealed valve
1	7309291-00	GRIFF BALANCE	HANDLE BALANCE
2	7472300-00	RASTBUCHSE	HOLD BUSHING
3	7326243-00	UP - ROSETTE	ESCUTCHEON, CONCEALED