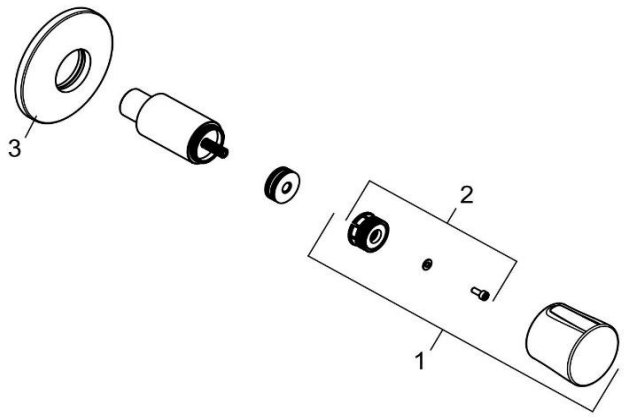

528479175		Zwei-Wege-Umstellung	two-way diverter
1	7309291-00	GRIFF BALANCE	HANDLE BALANCE
2	7472300-00	RASTBUCHSE	HOLD BUSHING
3	7322791-00	UP - ROSETTE	ESCUTCHEON, CONCEALED