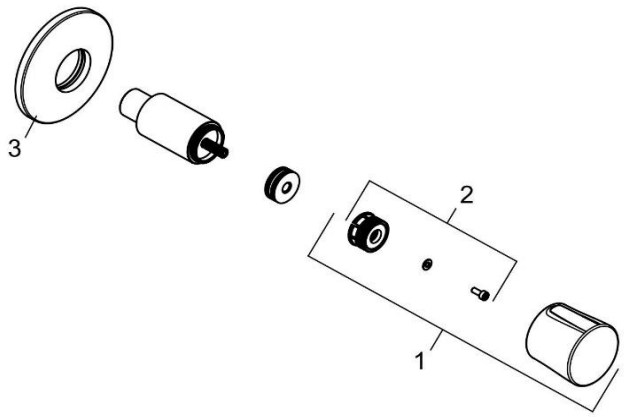

528469175		Drei-Wege-Umstellung	three-way diverter
1	7309291-00	GRIFF BALANCE	HANDLE BALANCE
2	7472300-00	RASTBUCHSE	HOLD BUSHING
3	7326043-00	UP - ROSETTE	ESCUTCHEON, CONCEALED