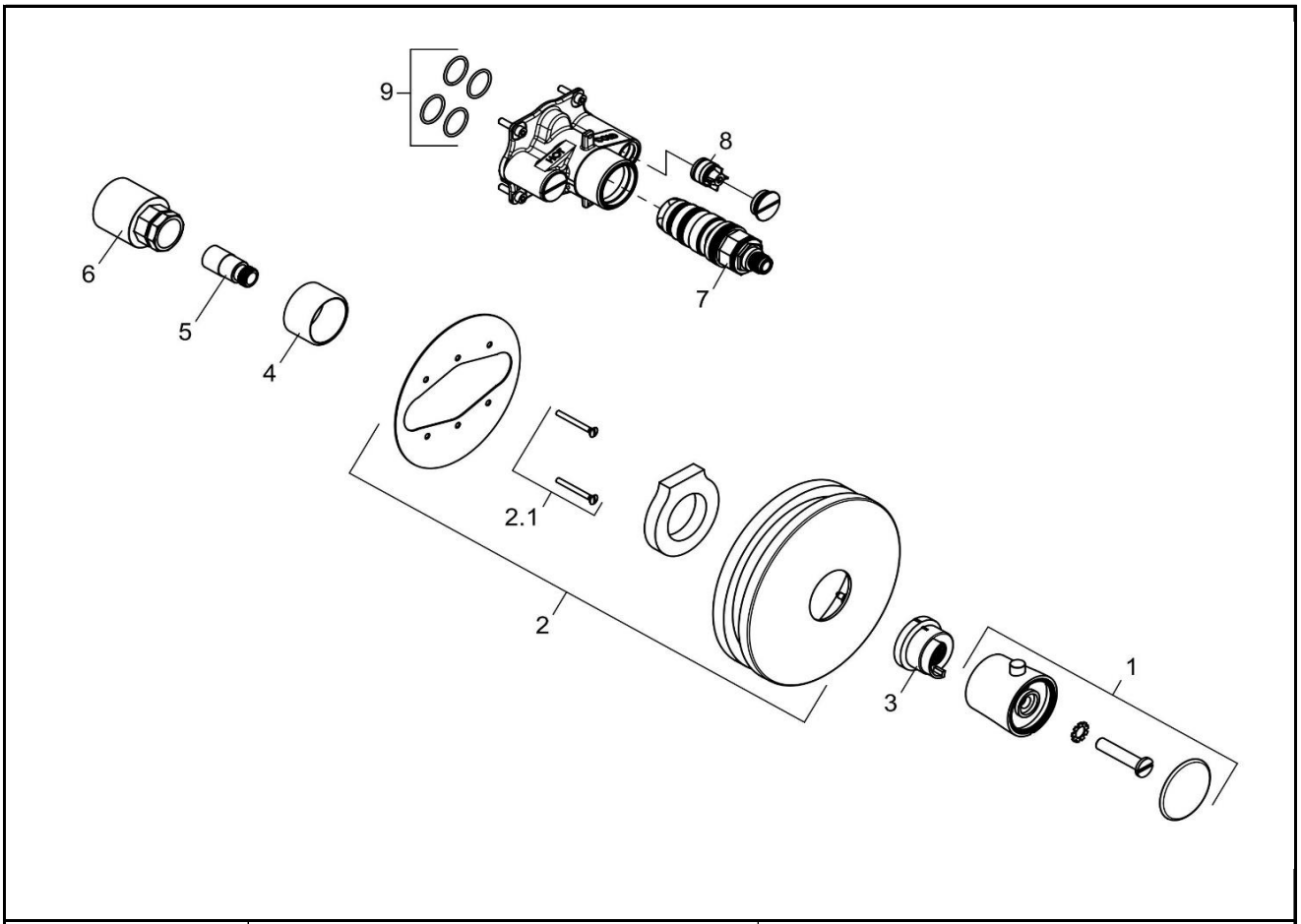

527299175		Unterputz-Thermostatarmatur	concealed thermostatic mixer
1	7300243-00	THERMOSTATGRIFF	HANDLE FOR THERMOSTAT
2	7326143-00	UP - ROSETTE	ESCUTCHEON, CONCEALED
2.1	92273135-00	SCHRAUBE	SCREW
3	93071506-00	JUSTIERBUCHSE	SLEEVE FOR ADJUSTMENT
4	92012205-00	HÜLSE	SLEEVE
5	92050637-00	SPINDELKUPPLUNG	EXTENSION FOR SPINDLE
6	92056205-00	KOPFSTÜCKVERLÄNGERUNG	EXTENSION FOR HEAD PIECE
7	7310800-00	THERMOSTAT	TEMPERATURE CONTROL UNIT
8	7479700-00	RÜCKFLUSSVERHINDERER	BACK FLOW PREVENTER
9	7301100-00	DICHTUNGSSATZ	SEALING SET