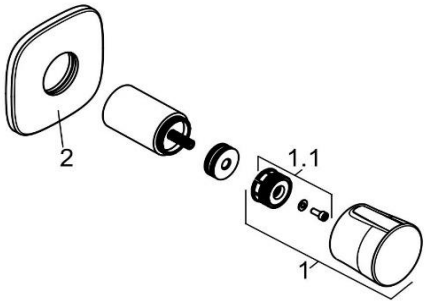

538460575		Drei-Wege-Umstellung	three-way diverter
1	7309205-00	GRIFF BALANCE	HANDLE BALANCE
1.1	7472300-00	RASTBUCHSE	HOLD BUSHING
2	7307905-00	UP - ROSETTE	ESCUTCHEON, CONCEALED