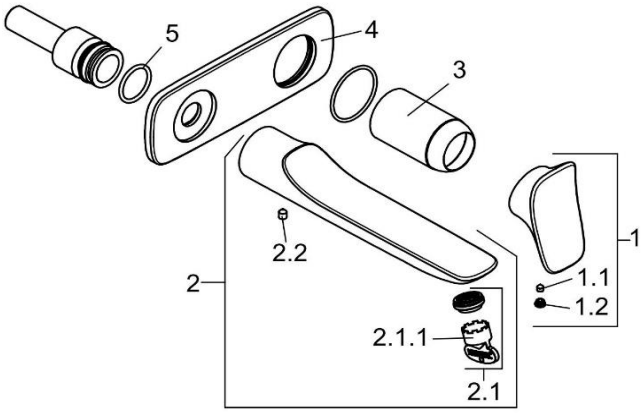

532450575		Waschtisch-Wandarmatur DN 15	wall mounted basin mixer DN 15
1	7307705-00	HEBEL AMBA	LEVER AMBA
1.1	92204601-00	GEWINDESTIFT	GRUB SCREW
1.2	93019705-00	STOPFEN	PLUG
2	7372805-00	AUSLAUF	SPOUT
2.1	7309800-00	STRAHLREGLER	AERATOR
2.1.1	93087500-00	STRAHLREGLERSCHLÜSSEL	WRENCH FOR AERATOR
2.2	91709235-00	GEWINDESTIFT	GRUB SCREW
3	92066705-00	ABDECKHÜLSE	COVER SLEEVE
4	92369805-00	UP - ROSETTE	ESCUTCHEON, CONCEALED
5	92504811-00	O - RING	O-RING