Technical Data

KLUDI 1926
3-hole basin mixer
DN 15

Ref.:
5104305G5

Finishes:
05 chrom

Product description
Manufacturer KLUDI GmbH & Co. KG
Typ: KLUDI 1926
3-hole basin mixer
Ref.: 5104305G5
3-hole basin mixer DN 15
two handle mixer
3 hole mounted
Crystal handle
Aerator M24
ceramic headparts 180°
shank-fixing
pop up waste 1 1/4" metal
without flexible high pressure supply tubes/
or copper pipes Ø 10 mm (KLUDI Art. Nr. 1620305)

Product picture

Dimensional drawing

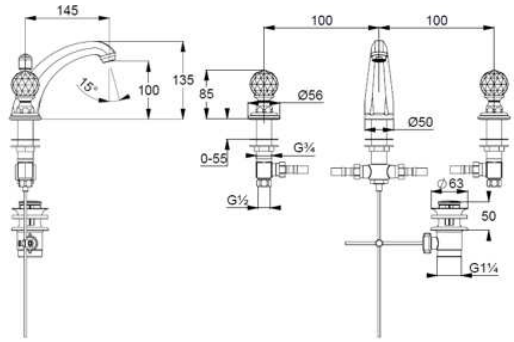

Flow rate diagram

KLUDI
WATER IN PERFECTION