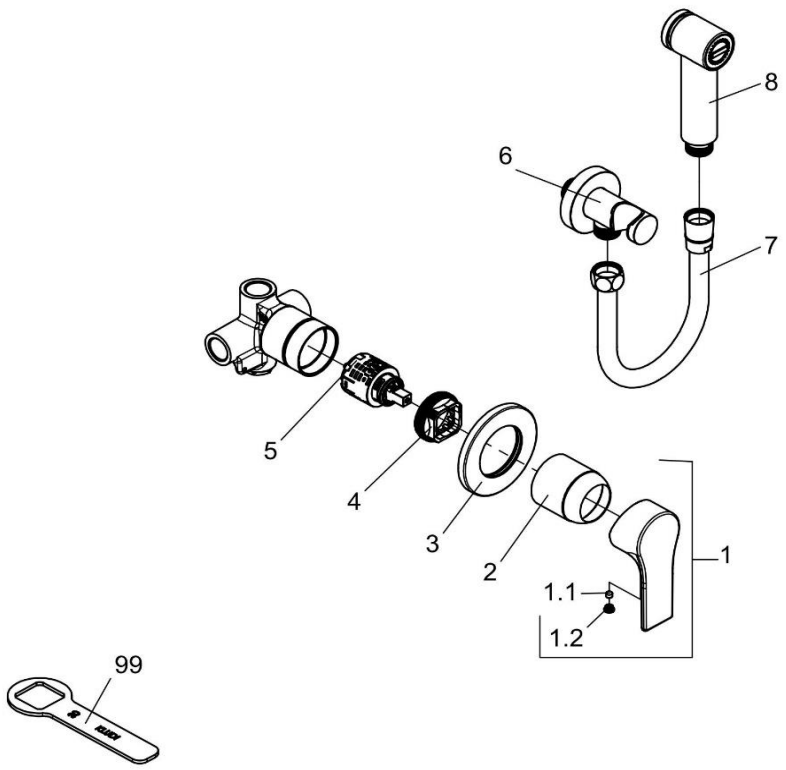

489980565		Hygiene- Set	hyienic- set
1	7366305-00	HEBEL ZENTA SL	LEVER ZENTA SL
1.1	92204601-00	GEWINDESTIFT	GRUB SCREW
1.2	93019705-00	STOPFEN	PLUG
2	92215405-00	ABDECKKAPPE	COVER CAP
3	7448805-00	ROSETTE	ESCUTCHEON
4	93033300-00	SPANNSCHRAUBE	FASTENING SCREW
5	7560700-00	STEUEREINHEIT	CERAMIC CARTRIDGE
6	6054705-00	SCHLAUCH - ANSCHLUSSBOGEN	HOSE CONNECTING BEND
7	72149F8-00	BRAUSESCHLAUCH	SHOWER HOSE
8	7343405-00	HYGIENE SIDE SPRAY	HYGIENIC SIDE SPRAY
99	92914900-00	SPANNSCHRAUBENSCHLÜSSEL	WRENCH FOR FASTENING SCREW