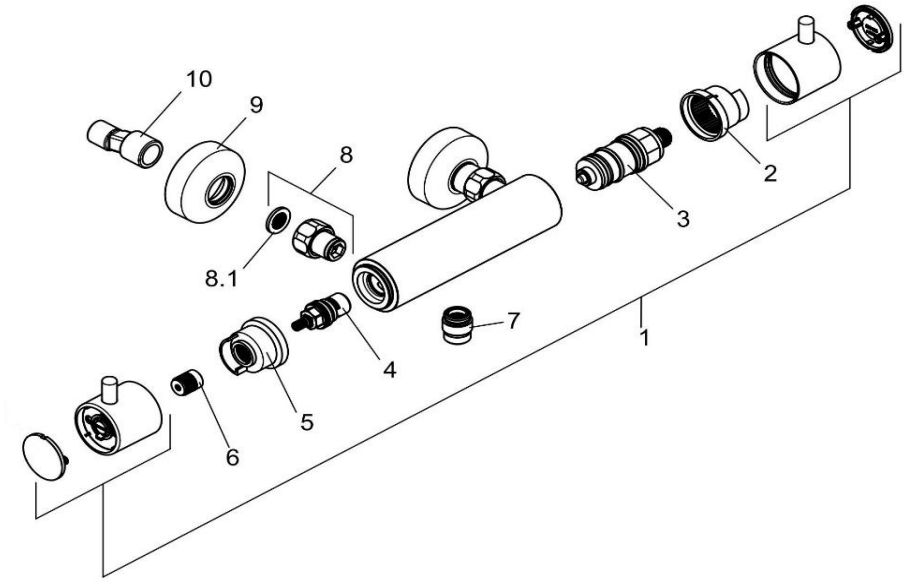

352030538		Thermostat Brausearmatur DN 15	thermostatic shower mixer DN 15
1	7489805-00	GRIFF - SET BOZZ	HANDLE SET BOZZ
2	93091406-00	JUSTIERBUCHSE	SLEEVE FOR ADJUSTMENT
3	7639000-00	THERMOSTAT	TEMPERATURE CONTROL UNIT
4	7878700-00	KERAMIK - OBERTEIL	CERAMIC HEAD PART
5	93039206-00	JUSTIERBUCHSE	SLEEVE FOR ADJUSTMENT
6	93006611-00	GRIFFBEFESTIGUNG	HANDLE MOUNTING
7	7578005-00	BRAUSEANSCHLUSSNIPPEL	SHOWER CONNECTING NIPPLE
8	7449505-00	WANDARMATURENANSCHLUSS	WALL CONNECTING NIPPLE
8.1	95502535-00	SIEBDICHTUNG	MESH GASKET
9	7421805-00	ROSETTE	ESCUTCHEON
10	7655100-00	S - ANSCHLUSS	S - CONNECTIONS